HYDROMATIK
connections par excellence

Test Points Couplings

FITTINGS WITH TEST COUPLING in Accordance With DIN 2353 Type G

Type RED |

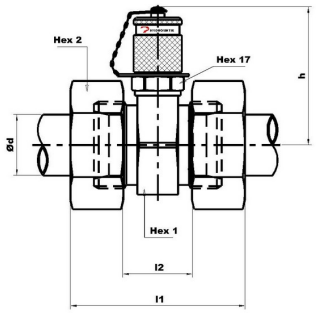

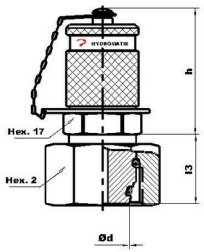

Version 'A'

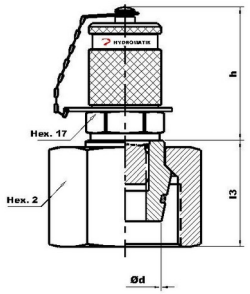

Version 'B'

Order No. Type G	Order No. Type RED	Series	PN Bar	Pipe Ã˜D	l1	l2	l3	h	Hex 1	Hex 2	Version
TC2000-G-06-L-N	TC2000-RED-06-L-N	L	315	6	51	21	15.5	49	24	14	A
TC2000-G-08-L-N	TC2000-RED-08-L-N	L	315	8	51	21	15.5	49	24	17	A
TC2000-G-10-L-N	TC2000-RED-10-L-N	L	315	10	53	23	16.5	49	24	19	A
TC2000-G-12-L-N	TC2000-RED-12-L-N	L	315	12	53	23	17.5	50.5	27	22	A
TC2000-G-15-L-N	TC2000-RED-15-L-N	L	315	15	55	25	21	52	30	27	B
TC2000-G-18-L-N	TC2000-RED-18-L-N	L	160	18	57	24	19.5	53	32	32	B
TC2000-G-22-L-N	TC2000-RED-22-L-N	L	160	22	61	28	20.5	55	36	36	B
TC2000-G-28-L-N	TC2000-RED-28-L-N	L	160	28	61	28	25	57.5	41	41	B
TC2000-G-35-L-N	TC2000-RED-35-L-N	L	160	35	69	26	30	60	46	50	B

TC2000-G-42-L-N	TC2000-RED-42-L-N	L	160	42	71	25	31	64.5	55	60	B
TC2000-G-06-S-N	TC2000-RED-06-S-N	S	630	6	55	25	14.5	49	24	17	A
TC2000-G-08-S-N	TC2000-RED-08-S-N	S	630	8	55	25	16.5	49	24	19	A
TC2000-G-10-S-N	TC2000-RED-10-S-N	S	630	10	57	24	16.5	49	24	22	A
TC2000-G-12-S-N	TC2000-RED-12-S-N	S	630	12	57	24	17.5	49	24	24	A
TC2000-G-14-S-N	TC2000-RED-14-S-N	S	630	14	63	27	19.5	50.5	27	27	B
TC2000-G-16-S-N	TC2000-RED-16-S-N	S	400	16	63	26	18	52	30	30	B
TC2000-G-20-S-N	TC2000-RED-20-S-N	S	400	20	69	26	24	55	36	36	B
TC2000-G-25-S-N	TC2000-RED-25-S-N	S	400	25	75	27	26	57.5	41	46	B
TC2000-G-30-S-N	TC2000-RED-30-S-N	S	400	30	81	28	30	60	46	50	B
TC2000-G-38-S-N	TC2000-RED-38-S-N	S	315	38	91	29	34	64.5	55	60	B

Note: For Ordering Viton Seal Please Replace 'N' by 'V'